SHEPHERD
MICRO RACING TEAM

VELOX 8.3

NAME	Lars Hoppe
DATE	24.05.2025
EVENT	ENS
TRACK	Ettlingen
AIR TEMP	20
TRACTION	Medium
BEST LAP	13,0

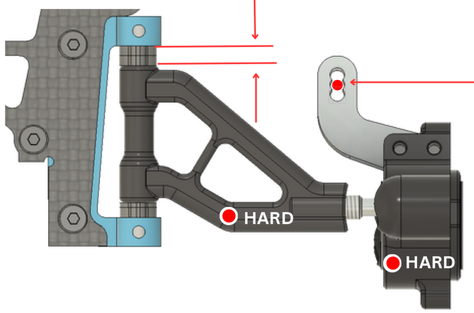

CASTER 3.0 mm

BUMP STEER 0.0 mm

UPRIGHT INSERTS

CENTRIC	EXCENTRIC
○	✔

FRONT ONEWAY POSITION

	HIGH		
BELT	210mm	210mm	207mm ✔
FRONT — REAR			
BELT	210mm	210mm	207mm
		LOW	

ACTIVE ○ SHIM ___ mm

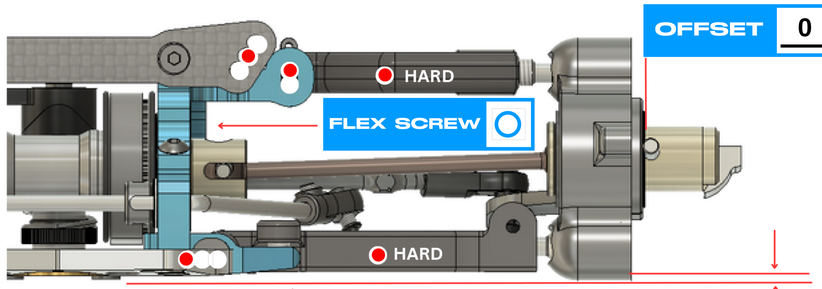

FLEX SCREW ○

OFFSET 0.6 mm

RIDE HEIGHT 8.5 mm

DOWNSTOP 1.0 mm

WHEELBASE

LONG	SHORT
○	✔

TOE IN/OUT 1.0°

CAMBER LEFT 2.0°

WIDTH 253.0 mm

CAMBER RIGHT 2.5°

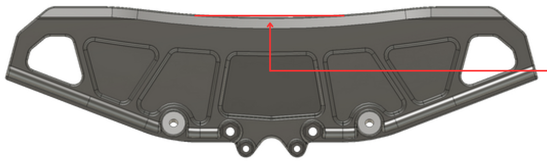

BODY Blitz TS40 0.6

DISTANCE TO BUMPER 20 mm

AWS BATTERY TRAY ○

CARBON ✔ BRASS ○ | CARBON ✔ BRASS ○ | CARBON ○ BRASS ○

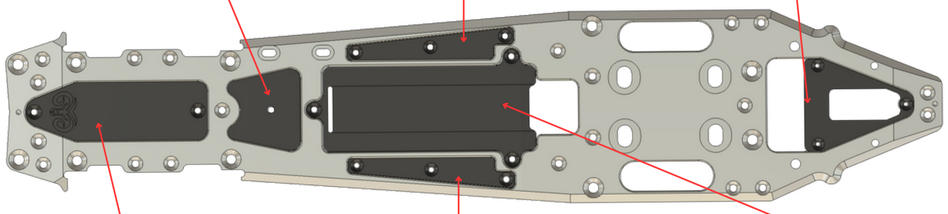

CARBON ○ BRASS ○ | CARBON ✔ BRASS ○ | CARBON ○ BRASS ○

FRONT / REAR

FRONT LEFT	FRONT RIGHT	TYRES	REAR LEFT	REAR RIGHT
Matrix		BRAND		
32	32	SHORE	35	35
69	69	DIAMETER	76	76
		ADDITIVE		

SHOCKS

Mugen white	SPRINGS	Mugen white
700	OIL	800
Std	PISTON	Std
1 x 1,2mm	HOLE	2 x 1,2mm
hard	FP SPRING	hard

ANTI-ROLL BAR

FRONT 2.3 mm REAR 2.9 mm

FRONT AXLE

SOLID ○ SPLIT ○ 90 DEG ○ STR ○

CLUTCH

TYPE	Shepherd
SHOE	Yellow
PRELOAD	1.35mm
GAP	0.65mm

GEAR RATIO

1ST 20 / 62 2ND 25 / 58

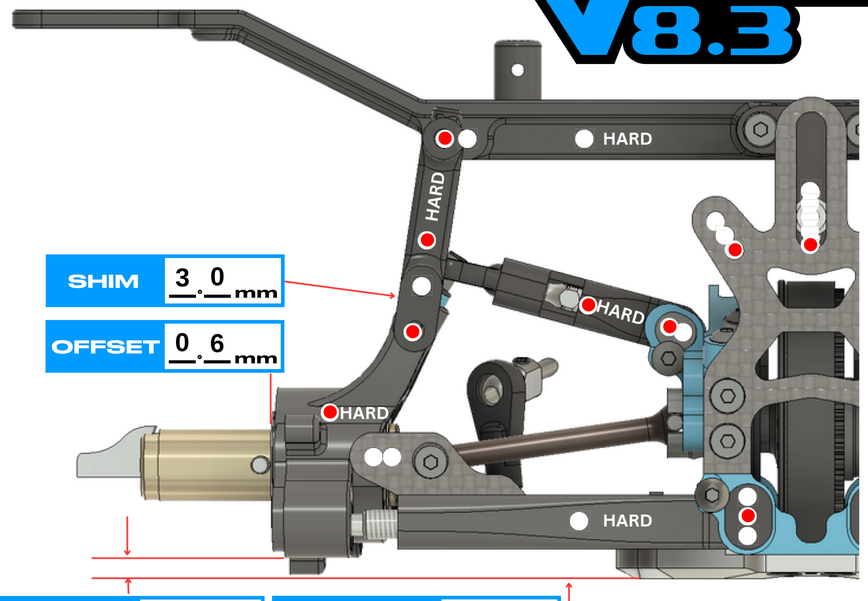

SHIM 3.0 mm

OFFSET 0.6 mm

DOWNSTOP 8.5 mm

RIDE HEIGHT 10.0 mm

CAMBER LEFT 3.0°

TOE IN/OUT 3.0°

CAMBER RIGHT 3.0°

WIDTH 262.0 mm

LONG	MEDIUM	SHORT
○	✔	○

8mm ○ 9mm ○ 10mm ●

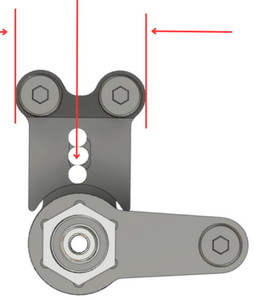

UPRIGHT INSERTS

F	R
○	◉

AERO DISCS

F	R
✔	○

ENGINE	Reds Pista 721	PIPE	2206		
MANIFOLD	Reds straight	GLOWPLUG	7	FUEL	Energy

NOTES

Lho-0020: 10mm Ackermann
Lho-0001: Carbon bodymount
Lho-0034: Messing rear weight (26g under rear belt)
45g behind fuel tank
leightweight front bumper (32g)
Radioplate Velox V8.2
narrow front shock mount